BS-854F11C-S3-C-MI-SE | BioSense Lite Full Color Series

4MP Full Color Fixed Lens Bullet IP Camera







Line Crossing



Area Detection



Motion Detection



IP67 Metal Casing

- 1/3" 4MP CMOS sensor
- H.265 triple stream encoding
- High-quality optical lens: 2.8mm
- White light range 20m
- Bulit-in PoE & Microphone
- Embedded intelligent classification algorithm based on computer vision technology
- Multiple intelligent video analytic features
- Support multiple browsers web client
- Remote viewing with mobile application and platform software
- Lightning protection up to 6KV
- IP67 metal casing

Product Overview

BioSense Lite Series IP Camera is the front-end of intelligent video surveillance solution released by ZKTeco based on the Deep-Learning algorithm and Computer Vision technology.

By using advanced and powerful CPU,couple with the embedded intelligent classification algorithm based on computer vision technology, the BioSense Lite IP Cameras can accurately detect and recognize 2 key types of target: human, vehicles, meanwhile effectively filter out the other useless objects such as: animals, leaves, shadows, and rain, etc to reduce the false alarms, and more focusing on the important alarms.

The BioSense Lite IP Cameras can greatly help to improve the efficiency and safety of the entire video surveillance system, can be widely used in different scenario such as smart school, office, industrial park, community, public security, etc.

Core Features

H.265 HEVC

H.265 is an evolutionary optimization of the traditional H.264, it includes a series of encoding strategy such as ROI, smart 2D/3D noise reduction, etc. Delivering high quality video with up to 70% lower bandwidth.

IVA (Intelligent Video Analytics)

The BioSense Lite IP Cameras support multiple intelligent video analytic functions: Line Crossing, Area detection, Smart Motion Detection supports human and vehicle targets classification.

Full-color & Starlight

It adopts an F1.0 large aperture lens and a 1/3" high-performance sensor. With a higher amount of absorbed light and an advanced image processing algorithm, the camera presents an impressive low light performance with an exceptional balance between noise reduction and the blur of moving objects. With 4pcs warm white LED illuminators, it can provide a colorful and vivid image even in total darkness.

ANR (Only for SD card models)
While the connection lost between IPC and NVR, the video will be saved in SD card. The saved video will be auto replenished to NVR when network recovers to avoid any video lost.

Protection
With precise mechanical and rugged metal casing design, the BioSense Series IP Cameras can stand against water and dust with industrial IP67 rank, and support to work at variety of harsh outdoor environments such as temperature range -30℃ to +60 ℃,etc.

Technical Specification

Camera

Model	BS-854F11C-S3-C-MI-SE				
Image Sensor	1/3" 4MP CMOS				
Max.Resolution	2560(H)*1440(V)				
ROM	128MB				
RAM	256MB				
Scanning System	Progressive Scan				
Electronic Shutter Speed	1/5 s to1/100,000 s				
Min. Illumination	0.001Lux@F1.0 (AGC on, Color)				
S/N Ratio	>52dB				
White light Range	20 m				
Illuminator On/Off Control	Auto/Manual				
Illuminator Number	4*White Light LED				
Smart IR	N/A				
Angle Adjustment for Installation	Pan: 0°–360° Tilt: 0°–90° Rotation: 0°–360°				
TV System	PAL/NTSC				
Image Settings	Trigger mode, Brightness, Contrast, Saturation, Hue, Sharpness, AGC, White balance, Gamma, Backlight mode, adjustable by platform software or web browser				
Software Reset Default	Support				
General Function	Heartbeat, Mirror, Privacy mask, Log, Password reset				

Lens

Lens Type	Fixed Lens				
Lens Mount	M12				
Mount Type	Board-in				
Focal Length	2.8mm				
Max. Aperture	F1.0				
Optical Zoom	N/A				
Field of View	FOV: 118° Horizontal: 88° Vertical: 45° Diagonal: 105°				
Iris Type	Fixed				
Close Focus Distance	1.5 m				
DORI Distance	Lens	Detect	Observe	Recognize	Identify
	2.8mm	43 m	16 m	9 m	4 m

Video

Video Compression	H.265 / H.264
Video Stream Capability	Triple streams
Resolution	4MP(2560*1440) / 3MP(2304*1296) / 1080P (1920*1080) / 1.3MP (1280*960) / 720P (1280*720) / D1 (704*576) / VGA (640*480) / Q720 (640*360)

Max Video Frame Rate	Main stream:	50Hz (PAL): 25fps (2560*1440,1920*1080, 1280*960, 1280*720) 60Hz (NTSC): 30fps (2560*1440,1920*1080, 1280*960, 1280*720)
	Sub stream:	50Hz (PAL): 25fps (704*576, 640*480, 640*360) 60Hz (NTSC): 30fps (704*576, 640*480, 640*360)
	Third stream:	50Hz (PAL): 25fps (1920*1080, 1280*960, 1280*720, 704*576) 60Hz (NTSC): 30fps (1920*1080, 1280*960, 1280*720, 704*576)
Video Bit Rate	H.264: 896kbps–6Mbps H.265: 1024Kbps ~ 6Mbps	
Day/Night	Auto (ICR) / Color / B&W	
BLC	Support	
HLC	Support	
WDR	DWDR	
Scene Self-adaptation	Support	
White Balance	Auto, Custom, Locked, Incandescent lamp, Warm light, Natural light, Fluorescent lamp	
Gain Control	Low, Mid low, Mid, Mid high, High	
Noise Reduction	2D / 3D NR	
Motion Detection	Smart /Ordinary (4 areas)	
Region of Interest (ROI)	Support (4 areas, Level 1~6)	
Defog	N/A	
Mirror	Support	
Image Rotation	0°/90°/180°/270°/Horizontal/Vertical	
Privacy Masking	4 areas	
Corridor Mode	Support	
Digital Zoom	Support	
Anti-flicker	N/A	
Audio		
Built-in MIC	Support	
Audio Compression	G.711ulaw	
Environment Noise Filtering	Support	
Audio Sampling Rate	8 kHz/16 kHz/32 kHz/44.1 kHz/48 kHz	
Audio Bit Rate	64 Kbps (G.711ulaw)	
Intelligent Video Analytics		
IVA (Perimeter Protection)	Line Crossing, Area detection, Smart Motion Detection (human and vehicle targets classification)	
Intelligent Search	Support fast retrieval by human & vehicle targets classification	
Intelligent Video	Support fast retrieval by human & vehicle targets classification, playback and backup	
Face Detection		
Face Templates	N/A	
Face Quality Filtering	N/A	
Face Detected Per Frame	N/A	
Detection Area	N/A	
Detected Face Size	N/A	
Capture Response	N/A	
Alarm		
Basic Alarm Event	Network disconnection, IP conflict, Illegal access, Motion detection, Video tampering, External alarm	
Smart Alarm Event	Line Crossing, Area detection, Smart Motion Detection (human and vehicle targets classification)	

Alarm Linkage Actions	Notify surveillance center, trigger recording, trigger capture, send email
Network	
Simultaneous Live View	Up to 15 channels
Network	1 RJ45 10 M/100 M self-adaptive Ethernet port
SDK and API	Support SDK, API and ONVIF
Cyber Security	Video encryption; firmware encryption; configuration encryption; account lockout; security logs; IP filtering; trusted boot; trusted execution; trusted upgrade; password protection; complicated password; basic and digest authentication for HTTP/HTTPS; TLS; IP address filter; Security Audit Log
Protocol	TCP/IP, HTTP, HTTPS, FTP, DHCP, DNS, DDNS, RTSP, NTP, UPnP, SMTP, IPv4, UDP, SSL/TLS, PPPoE, SNMP, WebSocket
Interoperability	ONVIF Profile S/T/G
User/Host	Up to 256 users can be added. 3 user levels: admin, operator and guest
Network Storage	FTP
Web Browser	IE / Edge /Firefox / Chrome / Safari
Management Software	AntarVis 2.0/ZKBioSecurity IVS/ZKBioAccess IVS/ZKBio CVSecurity/ZKBio CVAccess
Mobile Application	AntarView Pro+ (iOS & Android)
On-Board Storage	N/A
Operation System	Windows
P2P Cloud Service	Support
Port	
Audio Input	N/A
Audio Output	N/A
Alarm Input	N/A
Alarm Output	N/A
Interface	
Reset Button	N/A
ANR	N/A
USB	N/A
RS485	N/A
General	
Power	
Power Supply	PoE (IEEE802.3af,Class 3), DC 12V±10% reverse polarity protection
Power Consumption	Basic ≦ 3W (12 VDC); 4.5 W (PoE)
Power Interface	Ø 5.5 mm coaxial power plug
Structure	
Casing Material	Aluminium Alloy
Dimensions	171 * 75 * 66 (mm)
Net Weight	0.40kg
Gross Weight	0.52kg
Environment	
Operating Conditions	–30 °C to +60 °C (–22 °F to +140 °F)/ Humidity 95% or less (non-condensing)
Storage Conditions	–30 °C to +60 °C (–22 °F to +140 °F) /Humidity 95% or less (non-condensing)
Protection Grade	IP67
Certications	
Certificates	ISO9001, ISO14001, CE, FCC

Ordering Information

Type	Model	Descripton
4MP IP Camera	BS-854F11C-S3-C-MI-SE	4MP Full Color Fixed Lens Bullet IP Camera

Dimensions (mm)

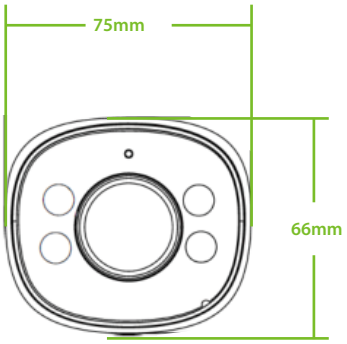

Front view

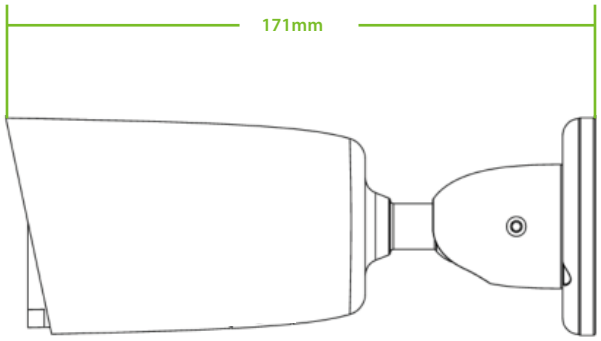

Side view

Accessories

Optional	Junction Box	Junction Box with Straight Bracket	Junction Box with Bent Bracket	Corner Mount Bracket	Pole Mount Bracket
Model	GB01	GB02	GB03	MT03	MT04
Picture					

ZKTECO CO.,LTD. www.zkteco.com E-mail: sales@zkteco.com

Copyright©2023 ZKTECO CO., LTD. All rights reserved.